AtlasScientific™
Environmental Robotics

V 3.7

Revised 2/20

OEM-pH™

Embedded pH Circuit

Reads	**pH**
Range	**.001 – 14.000**
Resolution	**.001**
Accuracy	**+/– 0.002**
Response time	**1 reading every 420ms**
Supported probes	**Any type & brand**
Calibration	**1, 2, 3 point**
Temp compensation	**Yes**
Data protocol	**SMBus/I²C**
Default I²C address	**0x65**
Operating voltage	**3.3V – 5V**
Data format	**ASCII**

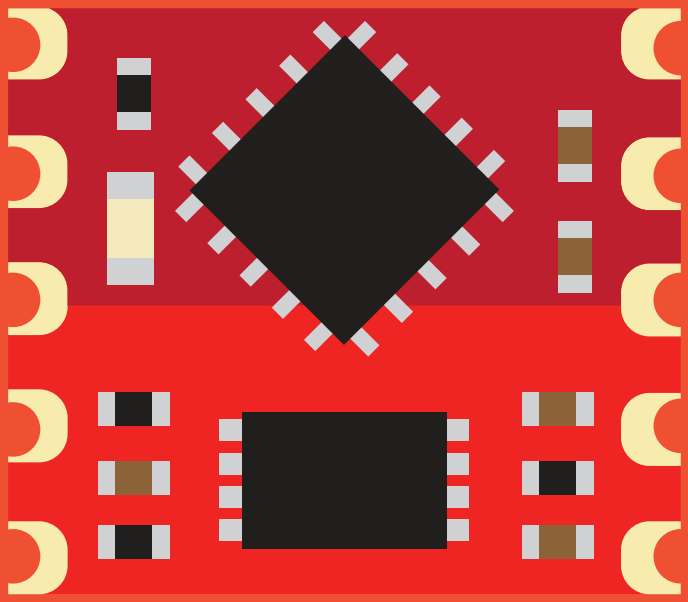

PATENT PROTECTED

Written by Jordan Press
Designed by Noah Press

This is an evolving document, check back for updates.

STOP

SOLDERING THIS DEVICE VOIDS YOUR WARRANTY.

Before purchasing the pH OEM™ read this data sheet in its entirety. This product is designed to be surface mounted to a PCB of your own design.

This device is designed for electrical engineers who are familiar with embedded systems design and programing. If you, or your engineering team are not familiar with embedded systems design and programing, Atlas Scientific does not recommend buying this product.

Get this device working in our OEM Development board first!

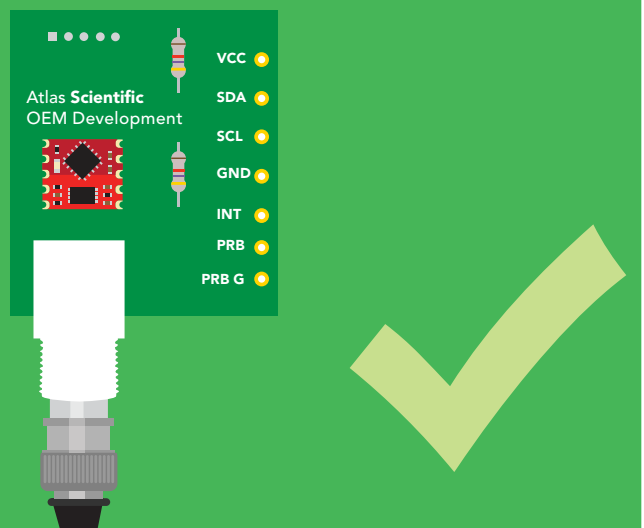

Do not solder wires to this device.

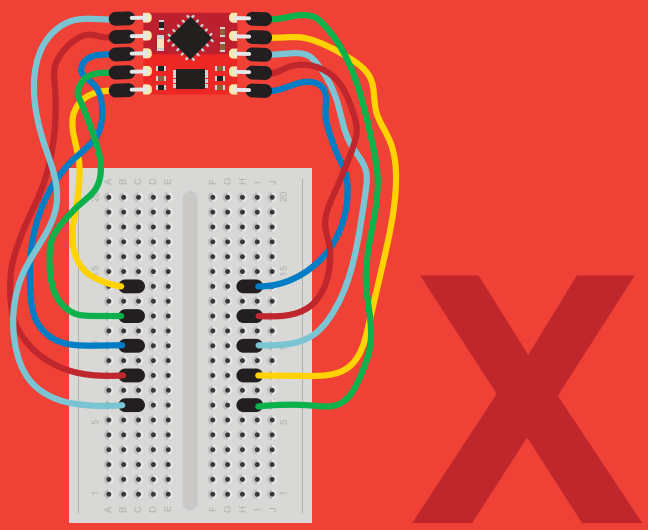

Table of contents

REGISTERS

OEM circuit dimensions

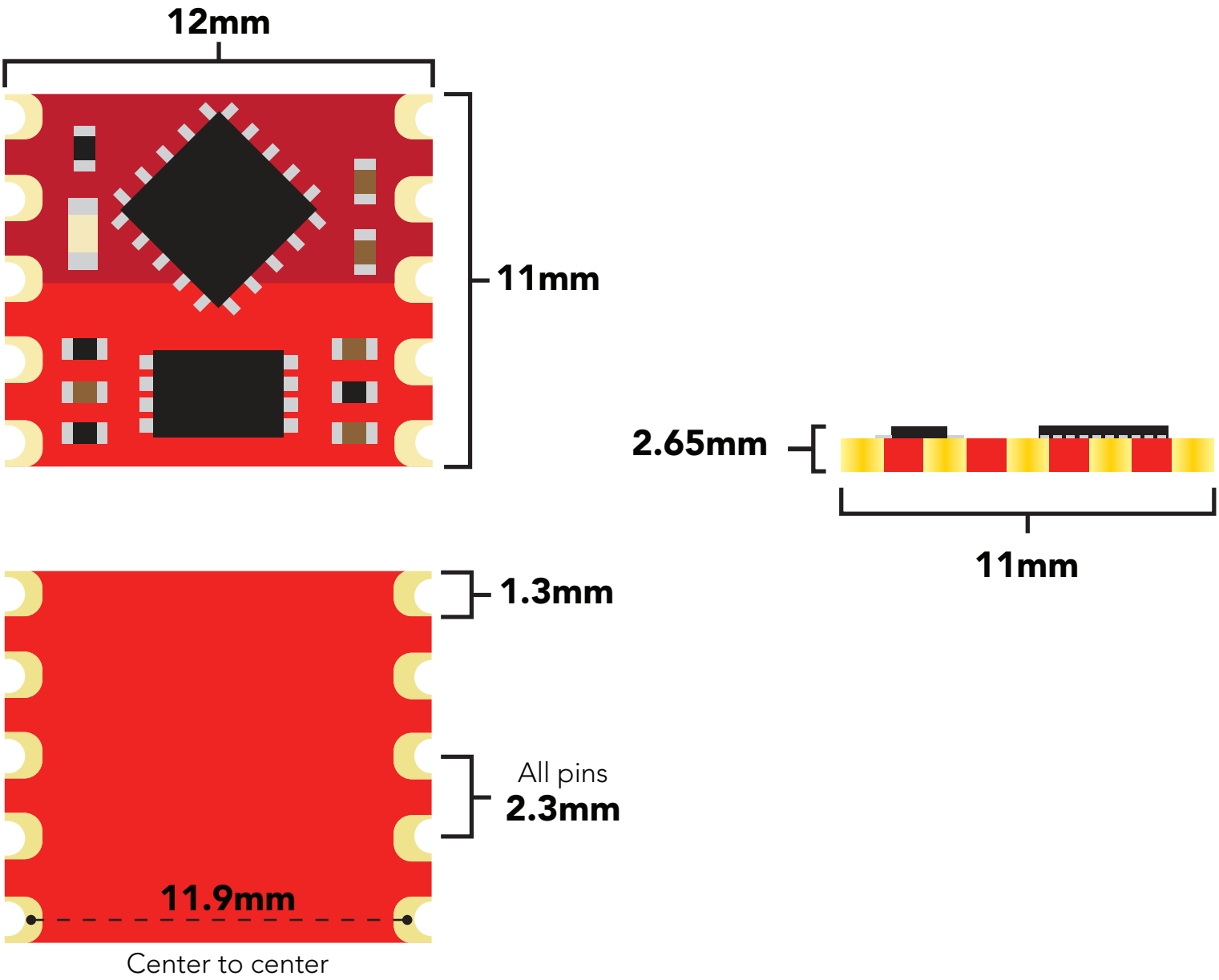

Power consumption

	LED	OPERATIONAL	HIBERNATION
5V	ON	5.12 mA	5.04 mA
	OFF	3.49 mA	3.45 mA
3.3V	ON	3.46 mA	3.43 mA
	OFF	3.03 mA	3.0 mA

Absolute max ratings

Parameter	MIN	TYP	MAX
Storage temperature	-60 °C		150 °C
Operational temperature	-40 °C	25 °C	125 °C
VCC	3.3V	5V	5.5V

Pin out

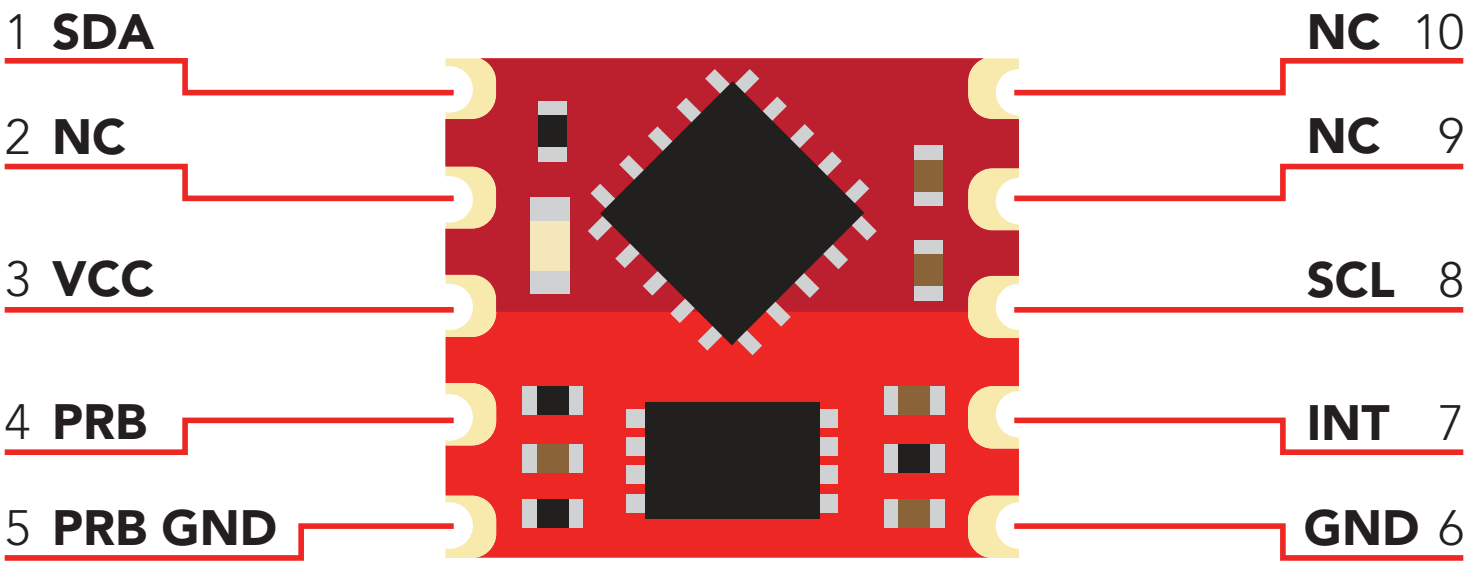

Resolution

The resolution of a sensor is the smallest change it can detect in the quantity that it is measuring. The Atlas Scientific™ pH OEM™ will always produce a reading with a resolution of three decimal places.

Example
0.002 pH
13.476 pH

Power on/start up

Once the Atlas Scientific™ pH OEM™ is powered on it will be ready to receive commands and take readings after 1ms. Communication is done using the SMBus/I²C protocol at speeds of 10 – 100 kHz.

Settings that are retained if power is cut

Calibration
I²C address

Settings that are *NOT* retained if power is cut

Active/Hibernation mode
LED control
Interrupt control

System overview

The Atlas Scientific pH OEM™ Class Embedded Circuit is the core electronics needed to read the pH of water from any off the shelf pH probe. The pH OEM™ Embedded Circuit will meet, or exceed the capabilities and accuracy found in all models of bench top laboratory grade pH meters.

The pH OEM™ is an SMBus / I²C slave device that communicates to a master device at a speed of 10 to 100 kHz. Read and write operations are done by accessing **26** different 8 bit registers.

Accessible registers

Device information

0x00: Device type	R
0x01: Firmware version	R

Device address

0x02: SMBus/I²C address lock/unlock	R/W
0x03: SMBus/I²C address	R/W

Control

0x04: Interrupt control	R/W
0x05: LED control	R/W
0x06: Active/hibernate	R/W
0x07: New reading available	R/W

Calibration

0x08: Calibration value MSB	R/W
0x09: Calibration value high byte	R/W
0x0A: Calibration value low byte	R/W
0x0B: Calibration value LSB	R/W

0x0C: Calibrate request	R/W
0x0D: Calibration confirm	R

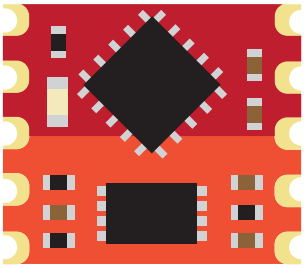

Read only R
Read and write R/W

Compensation

0x0E: Temperature compensation MSB	R/W
0x0F: Temperature compensation high byte	R/W
0x10: Temperature compensation low byte	R/W
0x11: Temperature compensation LSB	R/W

Confirmation

0x12: Temperature confirm MSB	R
0x13: Temperature confirm high byte	R
0x14: Temperature confirm low byte	R
0x15: Temperature confirm LSB	R

Sensor Data

0x16: pH reading MSB	R
0x17: pH reading high byte	R
0x18: pH reading low byte	R
0x19: pH reading LSB	R

Each pH reading takes 420ms

The default device address is **0x65**
This address can be changed.

Reading register values

To read one or more registers, issue a write command and transmit the register address that should be read from, followed by a stop command. Then issue a read command, the data read will be the value that is stored in that register. Issuing another read command will automatically read the value in the next register. This can go on until all registers have been read. After reading the last register, additional read commands will return 0xFF. Issuing a stop command will terminate the read event.

The default device address is **0x65**
This address can be changed.

Example
Start reading at register 0x04 and read 2 times.

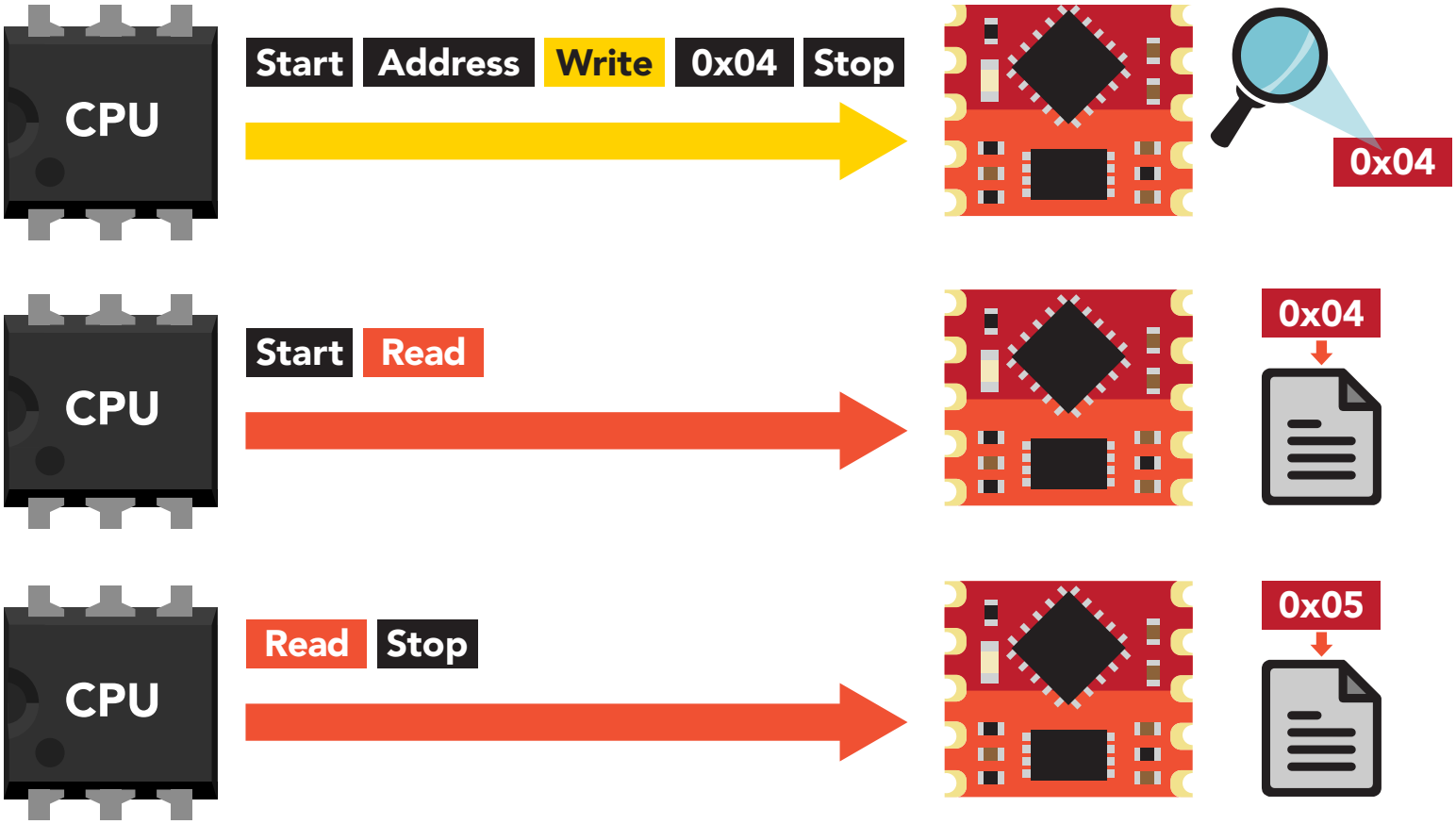

Example code
reading two registers

```
byte i2c_device_address=0x65;
byte reg_4, reg_5;

Wire.beginTransmission(i2c_device_address);
Wire.write(0x04);
Wire.endTransmission();

Wire.requestFrom(i2c_device_address,2);
reg_4=Wire.read();
reg_5=Wire.read();
Wire.endTransmission();
```

Writing register values

All registers can be read, but only registers marked read/write can be written to.

To write to one *(or more)* registers, issue a write command and transmit the register address that should be written to, followed by the data byte to be written. Issuing another write command will automatically write the value in the next register. This can go on until all registers have been written to. After writing to the last register, additional write commands will do nothing.

Example
Start writing at address 0x05 and write 2 values.

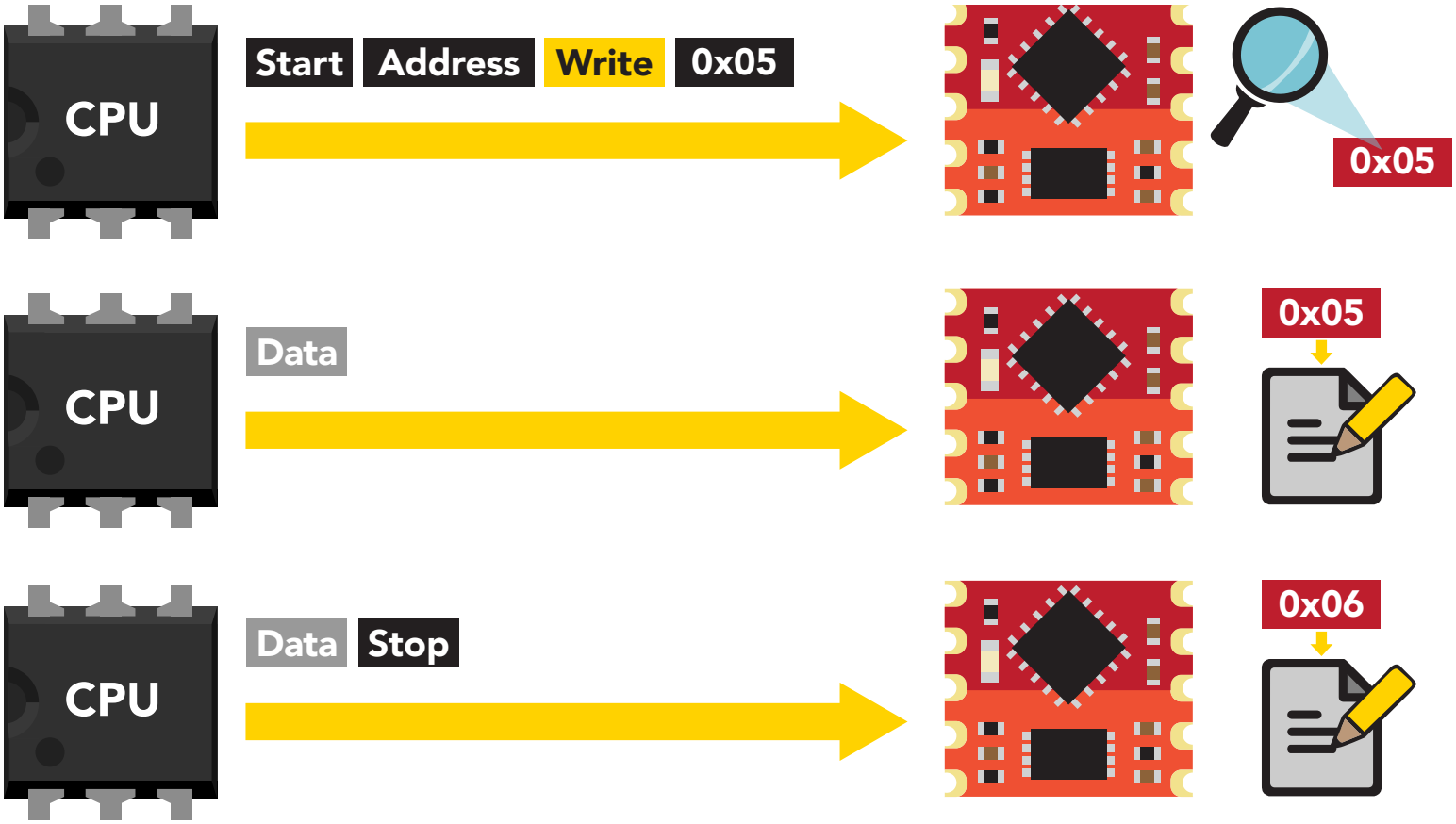

Example code
writing the number 1 in register 0x05 – 0x06

```
byte i2c_device_address=0x65;
byte starting_register=0x05
byte data=1;

Wire.beginTransmission(i2c_device_address);
Wire.write(starting_register);
Wire.write(data);
Wire.write(data);
Wire.endTransmission();
```

Sending floating point numbers

For ease of understanding we are calling fixed decimal numbers "floating point numbers." We are aware they are not technically floating point numbers.

It is not possible to send/receive a floating (fixed decimal) point number over the SMBus/ I^2C data protocol. Therefore, a multiplier/divider is used to remove the decimal point. Do not transmit a floating point number without property formatting the number first.

2 blocks of registers require the master to transmit a floating point number.

Calibration

Compensation

When transmitting a floating point number to any of these 2 register blocks, the number must first be multiplied by ***1000 for pH calibration values*** and ***100 for temperature compensation values***. This would have the effect of removing the floating point. Internally the pH OEM™ will divide the number by 100 or 1000 (depending on type), converting it back into a floating point number.

Example

Setting a pH calibration midpoint of: 7.123
7.123 X **1000** = 7123
Transmit the number 7123 to the Calibration Value Registers

Setting a pH calibration low point of: 4.00
4.000 X **1000** =4000
Transmit the number 4000 to the Calibration Value Registers

Setting a temperature compensation value of 99.06˚C
99.06 X **100** = 9906
Transmit the number 9906 to the Temperature Compensation Registers

When reading back a value stored in one of these 2 register blocks the value must be divided by 100 or 1000 (depending on type) to return it to its originally intended value.

Receiving floating point numbers

2 blocks of registers require the master to transmit a floating point number.

Sensor Data **Confirmation**

After receiving a value from any of these 2 register blocks, the number must be divided by ***1000 for the pH Read Register*** or ***100 for the Temperature Confirmation Register*** to convert it back into a floating point number.

Example
Reading an pH value of 14.563
Value received = 14563
14563 / **1000** =14.563

Reading a Temperature confirmation value of 99.06˚C
Value received = 9906
9906 / **100** = 99.06˚C

Registers

Device information

0x00: Device type	R
0x01: Firmware version	R

0x00 – Device type register

1 unsigned byte
Read only value = 1
1 = pH

This register contains a number indicating what type of OEM device it is.

0x01 – Firmware version register

1 unsigned byte
Read only value = 2
2 = firmware version

This register contains a number indicating the firmware version of the OEM device.

Example code
reading device type and device version registers

```
byte i2c_device_address=0x65;
byte starting_register=0x00
byte device_type;
byte version_number;

Wire.beginTransmission(i2c_device_address);
Wire.write(staring_register);
Wire.endTransmission();

Wire.requestFrom(i2c_device_address,(byte)2);
device_type = Wire.read();
version_number = Wire.read();
Wire.endTransmission();
```


Changing I²C address

0x02: SMBus/I²C address lock/unlock	R/W
0x03: SMBus/I²C address	R/W

This is a 2 step procedure

To change the I²C address, an unlock command must first be issued.

Step 1

Issue unlock command

0x02 – I²C address unlock register

1 unsigned byte
Read only value = 0 or 1
0 = **unlocked**
1 = **locked**

To unlock this register it must be written to twice.

Start	unlock register	0x55	Stop
Start	unlock register	0xAA	Stop

The two unlock commands must be sent back to back in immediate succession. No other write, or read event can occur. Once the register is unlocked it will equal 0x00 (unlocked).

To lock the register
Write any value to the register other than 0x55;
or, change the address in the Device Address Register.

Example code
address unlock

```
byte i2c_device_address=0x65;
byte unlock_register=0x02;

Wire.beginTransmission(bus_address);
Wire.write(unlock_register);
Wire.write(0x55);
Wire.endTransmission();

Wire.beginTransmission(bus_address);
Wire.write(unlock_register);
Wire.write(0xAA);
Wire.endTransmission();
```


0x03 – I²C address register

1 unsigned byte
Default value = **0x65**
Address can be changed **0x01 – 0x7F (1–127)**

Address changes outside of the possible range **0x01 – 0x7F (1–127)** will be ignored.

After a new address has been sent to the device the Address lock/unlock register will lock and the new address will take hold. It will no longer be possible to communicate with the device using the old address.

Settings to this register are retained if the power is cut.

Example code
changing device address

```
byte i2c_device_address=0x65;
byte new_i2c_device_address=0x60;
byte address_reg=0x03;

Wire.beginTransmission(bus_address);
Wire.write(address_reg);
Wire.write(new_i2c_device_address);
Wire.endTransmission();
```


Control registers

0x04: Interrupt control	R/W
0x05: LED control	R/W
0x06: Active/hibernate	R/W
0x07: New reading available	R/W

0x04 – Interrupt control register

1 unsigned byte
Default value = 0 (disabled)

Command values
0 = disabled
2 = pin high on new reading (manually reset)
4 = pin low on new reading (manually reset)
8 = invert state on new reading (automatically reset)

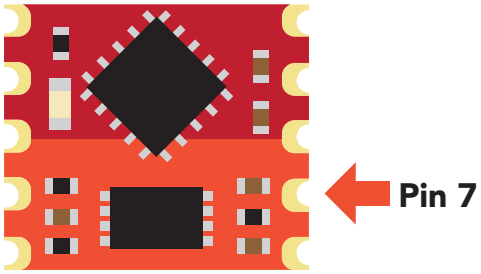

The Interrupt control register adjusts the function of pin 7 (the interrupt output pin).

Settings to this register are **not** retained if the power is cut.

Pin high on new reading

Command value = 2

By setting the interrupt control register to 2 the pin will go to a low state (0 volts). Each time a new reading is available the INT pin (pin 7) will be set and output the same voltage that is on the VCC pin.

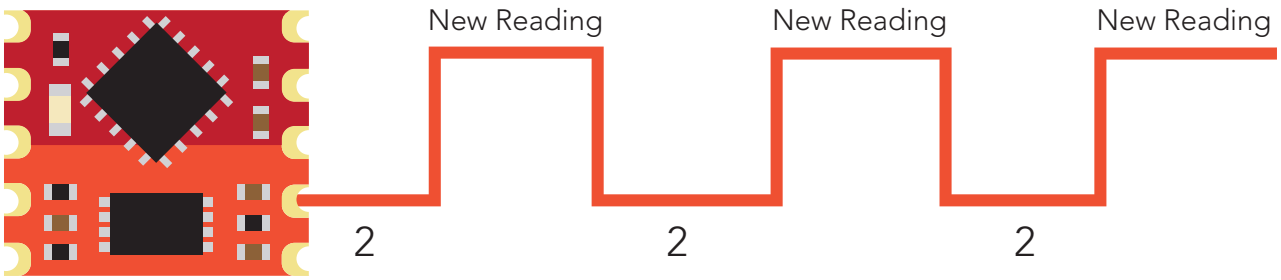

The pin will not auto reset. 2 must be written to the interrupt control register after each transition from low to high.

Example code
Setting pin high on new reading

```
byte i2c_device_address=0x65;
byte int_control=0x04;

Wire.beginTransmission(i2c_device_address);
Wire.write(int_control);
Wire.write(0x02);
Wire.endTransmission();
```


Pin low on new reading

Command value = 4

By setting the interrupt control register to 4 the pin will go to a high state (VCC). Each time a new reading is available the INT pin (pin 7) will be reset and the pin will be at 0 volts.

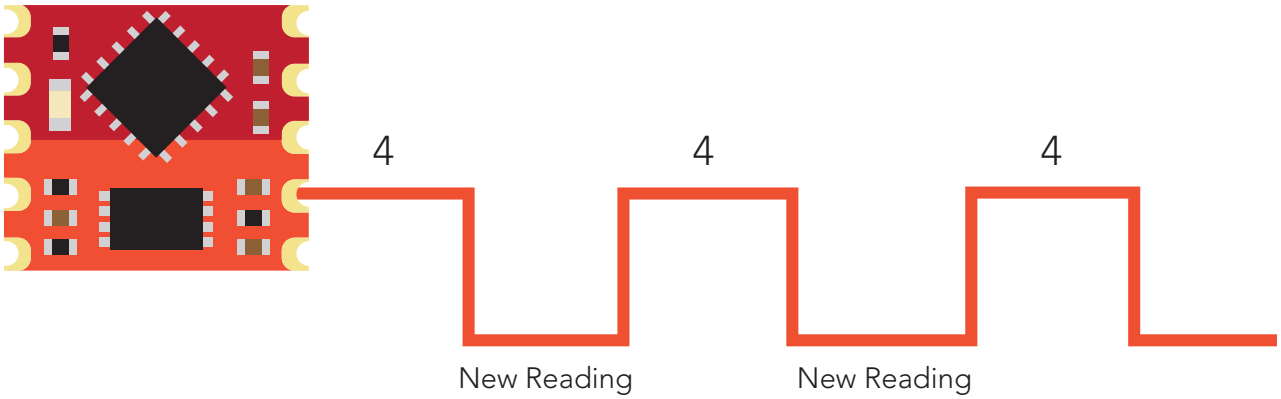

The pin will not auto set. 4 must be written to the interrupt control register after each transition from high to low.

Example code
Setting pin low on new reading

```
byte I2C_device_address=0x65;
byte int_control=0x04;

Wire.beginTransmission(I2C_device_address);
Wire.write(int_control);
Wire.write(0x04);
Wire.endTransmission();
```

Invert state on new reading

Command value = 8

By setting the interrupt control register to 8 the pin will remain in whatever state it is in. Each time a new reading is available the INT pin (pin 7) will invert its state.

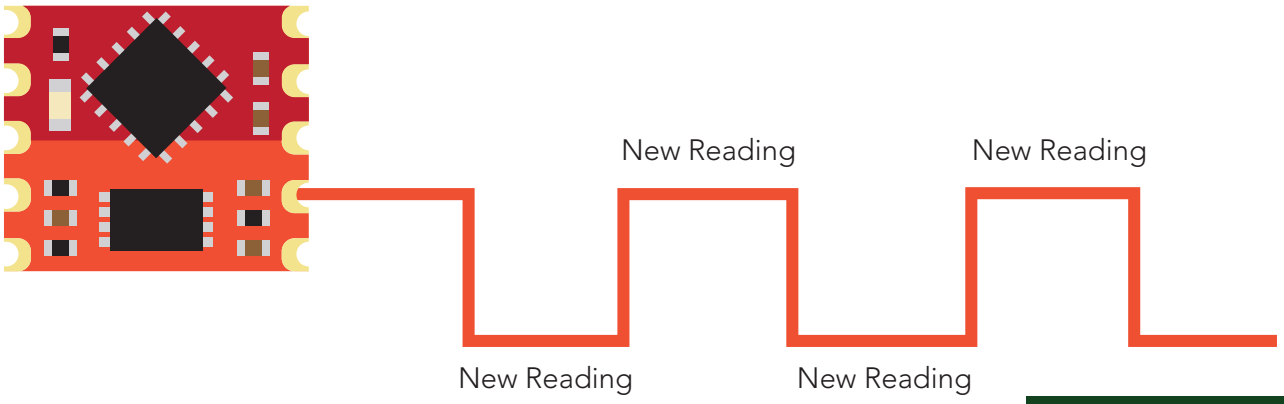

The pin will automatically invert its state each time a new reading is available. This setting has been specifically designed for a master device that can use an interrupt on change function.

Example code
Inverting state on new reading

```
byte i2c_device_address=0x65;
byte int_control=0x04;

Wire.beginTransmission(i2c_device_address);
Wire.write(int_control);
Wire.write(0x08);
Wire.endTransmission();
```


0x05 – LED control register

1 unsigned byte

Command values
1 = Blink each time a reading is taken
0 = Off

The LED control register adjusts the function of the on board LED. By default the LED is set to blink each time a reading is taken.

Example code
Turning off LED

```
byte i2c_device_address=0x65;
byte led_reg=0x05;

Wire.beginTransmission(i2c_device_address);
Wire.write(led_reg);
Wire.write(0x00);
Wire.endTransmission();
```

Settings to this register are **not** retained if the power is cut.

0x06 – Active/hibernate register

1 unsigned byte

To wake the device
Transmit a 0x01 to register 0x06

To hibernate the device
Transmit a 0x00 to register 0x06

This register is used to activate, or hibernate the sensing subsystem of the OEM device.

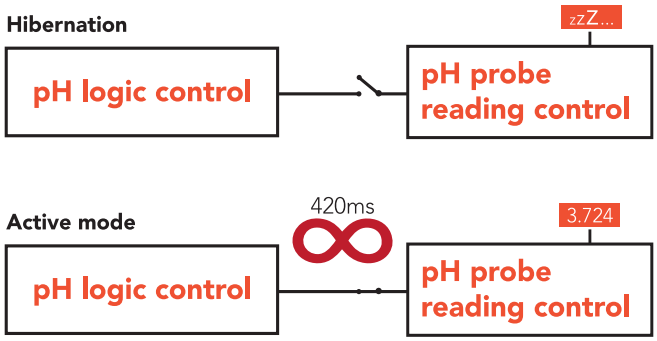

Example code
Activate pH readings

```
byte i2c_device_address=0x65;
byte active_reg=0x06;

Wire.beginTransmission(i2c_device_address);
Wire.write(active_reg);
Wire.write(0x01);
Wire.endTransmission();
```

Once the device has been woken up it will continuously take readings every 420ms. **Waking the device is the only way to take a reading. Hibernating the device is the only way to stop taking readings.**

0x07 – New reading available register

1 unsigned byte
Default value = 0 (no new reading)
New reading available = 1

Command values
0 = reset register

This register is for applications where the interrupt output pin cannot be used and continuously polling the device would be the preferred method of identifying when a new reading is available.

When the device is powered on, the New Reading Available Register will equal 0. Once the device is placed into active mode and a reading has been taken, the New Reading Available Register will move from 0 to 1.

This register will never automatically reset itself to 0. The master must reset the register back to 0 each time.

Example code
Polling new reading available register

```
byte i2c_device_address=0x65;
byte new_reading_available=0;
byte nra=0x07;

while(new_reading_available==0){
Wire.beginTransmission(i2c_device_address);
Wire.write(nra);
Wire.endTransmission();

Wire.requestFrom(i2c_device_address,(byte)1);
new_reading_available = Wire.read();
Wire.endTransmission();
delay(10);
}

if(new_reading_available==1){
call read_pH();
Wire.beginTransmission(i2c_device_address);
Wire.write(nra);
Wire.write(0x00);
Wire.endTransmission();
}
```


Calibration

0x08: Calibration value MSB	R/W
0x09: Calibration value high byte	R/W
0x0A: Calibration value low byte	R/W
0x0B: Calibration value LSB	R/W

0x08 – 0x0B Calibration registers

Signed long
0x08 = MSB
0x0B = LSB
Units = pH

Calibration values can be whole number, or floating point.
The first calibration point must always be pH 7.

Both pH 4 and pH 10 calibration commands can be sent as many times as you like. However, each time a ph 7 calibration command is sent both the 4 and 10 calibration points are deleted. This is because pH 7 is the foundation of the calibration protocol.

After sending a value to this register block, calibration is **not** complete. The calibration request register must be set after loading a calibration value into this register block.

To send a new calibration value to the pH OEM™ the value of the calibration solution must be multiplied by 1000 and then transmitted to the pH OEM™. The calibration value will be divided by 1000 internally. Move the value from a float to an unsigned long. Break up the unsigned long into its 4 individual bytes. Send the bytes (MSB to LSB) to registers 0x08, 0x09, 0x0A and 0x0B.

Example

Calibrating to a pH of 7.002
calibration value = 7.002
7.002 x 1000 = 7002
7002 to HEX = 0x00001B5A

calibration MSB Register = 0x00
calibration high byte Register = 0x00
calibration low byte Register = 0x1B
calibration LSB Register = 0x5A

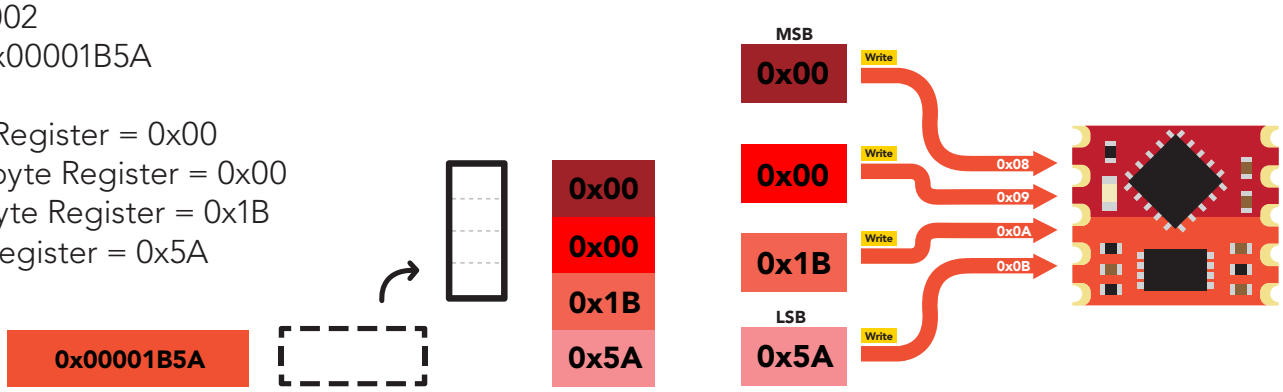

0x0C – Calibration request register

1 unsigned byte

Command values
1 Clear calibration = (delete all calibration data)
2 Low point calibration = (typically this is pH 4.0)
3 Midpoint calibration = (typically this is pH 7.0)
4 High point calibration low = (typically this is pH 10.0)

Once a calibration value has been transmitted to the previous registers (0x08 – 0x0B) the calibration request register is used to apply the calibration value.

By default this register will read 0x00. When a calibration request command has been sent and a stop command has been issued, the pH OEM™ will perform that calibration requested. Once the calibration has been done the calibration request registers value will return to 0x00.

After setting this register to one of the four possible values, calibration will commence once an I²C stop bit has been transmitted.

0x0D – Calibration confirmation register

1 unsigned byte

Command values
0 = low point calibration
1 = midpoint calibration
2 = high point calibration

After a calibration event has been successfully carried out, the calibration confirmation register will reflect what calibration has been done, by setting bits 0 – 2.

Bit 2 (High)	**Bit 1** (Mid)	**Bit 0** (Low)	**Decimal**
0	0	0	0
0	0	1	1
0	1	0	2
0	1	1	3
1	0	0	4
1	0	1	5
1	1	0	6
1	1	1	7

Settings to this register are retained if the power is cut.

Temperature compensation

0x0E: Temperature compensation MSB	R/W
0x0F: Temperature compensation high byte	R/W
0x10: Temperature compensation low byte	R/W
0x11: Temperature compensation LSB	R/W

0x0E – 0x11 Temperature compensation registers

Unsigned long
0x0E = MSB
0x11 = LSB
Default value = 25 °C
Units = °C

The pH OEM™ Embedded pH Circuit can take temperature compensated pH readings. Any temperature value from 0.01 °C to 200.0 °C can be entered into the device. The default temperature is 25.0 °C

To send a new temperature to the pH OEM™ the value of the temperature must be multiplied by 100 and then transmitted to the pH OEM™. Internally the temperature will be divided by 100.

Settings to this register are **not** retained if the power is cut.

Example

Setting the register to 34.26°C
34.26 x 100 = 3,426
3,426 ➡ Unsigned long
Unsinged long = Hex (0x00, 0x00, 0x0D, 0x62)

0x0E	0x1F	0x10	0x11

Temperature confirmation

0x12: Temperature confirm MSB	R
0x13: Temperature confirm high byte	R
0x14: Temperature confirm low byte	R
0x15: Temperature confirm LSB	R

0x12 – 0x15 Temperature confirmation registers

Unsigned long
0x12 = MSB
0x15 = LSB
Default value = 25 °C
Units = °C

The value in this register is only updated when actively taking readings.

This read only data is the temperature compensation value that was used to take the pH readings. This register can be used to be sure that the pH readings that are being taken are at the correct temperature.

If the temperature compensation register is changed from 25 °C to 30 °C, reading this register will show what temperature the pH reading was taken at. If a reading is being taken each time the interrupt pin fires, the first reading may still be at the old temperature of 25 °C while all other subsequent readings would then be at 30 °C.

To read the value in this register, read the bytes MSB to LSB and assign them to an unsigned long, cast to a float and divide that number by 100.

Sensor data

0x16: pH reading MSB	R
0x17: pH reading high byte	R
0x18: pH reading low byte	R
0x19: pH reading LSB	R

0x16 – 0x19 pH reading registers

Signed long
0x16 = MSB
0x19 = LSB
Units = pH

The last pH reading taken is stored in these four registers. To read the value in this register, read the bytes MSB to LSB and assign them to an unsigned long, cast to a float and divide that number by 1000.

Example

Reading an pH of 8.347

Step 1 read 4 bytes

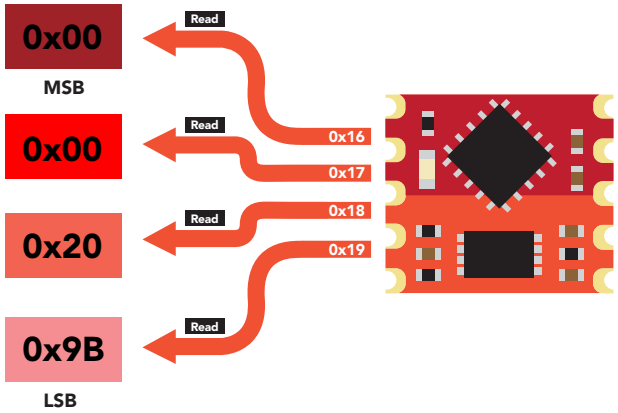

Step 2 read unsigned long

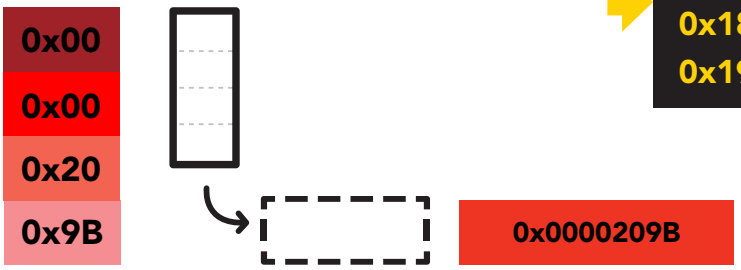

Step 3 cast unsigned long to a float

Step 4 divide by 1,000

OEM electrical isolation

If the pH OEM™ Class Embedded Circuit is going to be used in consumer, industrial, or scientific/medical applications electrical isolation is strongly recommended. Electrically isolating the device will insure that the readings are accurate, the pH probe does not interfere with other sensors and that outside electrical noise does not affect the device.

The goal of electrically isolating the pH OEM™ device is to insure that the device no longer shares a common ground with the master CPU, other sensors and other devices that are can be traced back to a common ground. It is important to keep in mind that simply isolating the power and ground is not enough. Both data lines (SDA, SCL) and the INT pin must also be isolated.

This technology works by using tiny transformers to induce the voltage across an air gap. PCB layout requires special attention for EMI/EMC and RF Control, having proper ground planes and keeping the capacitors as close to the chip as possible are crucial for proper performance. The two data channels have a 4.7kΩ pull up resistor on both the isolated and non-isolated lines (R1, R2, R3, and R4) The output voltage is set using a voltage divider (R5, R6, and R,7) this produces a voltage of 3.9V regardless of your input voltage.

Isolated ground is different from non-isolated ground, these two lines should not be connected together.

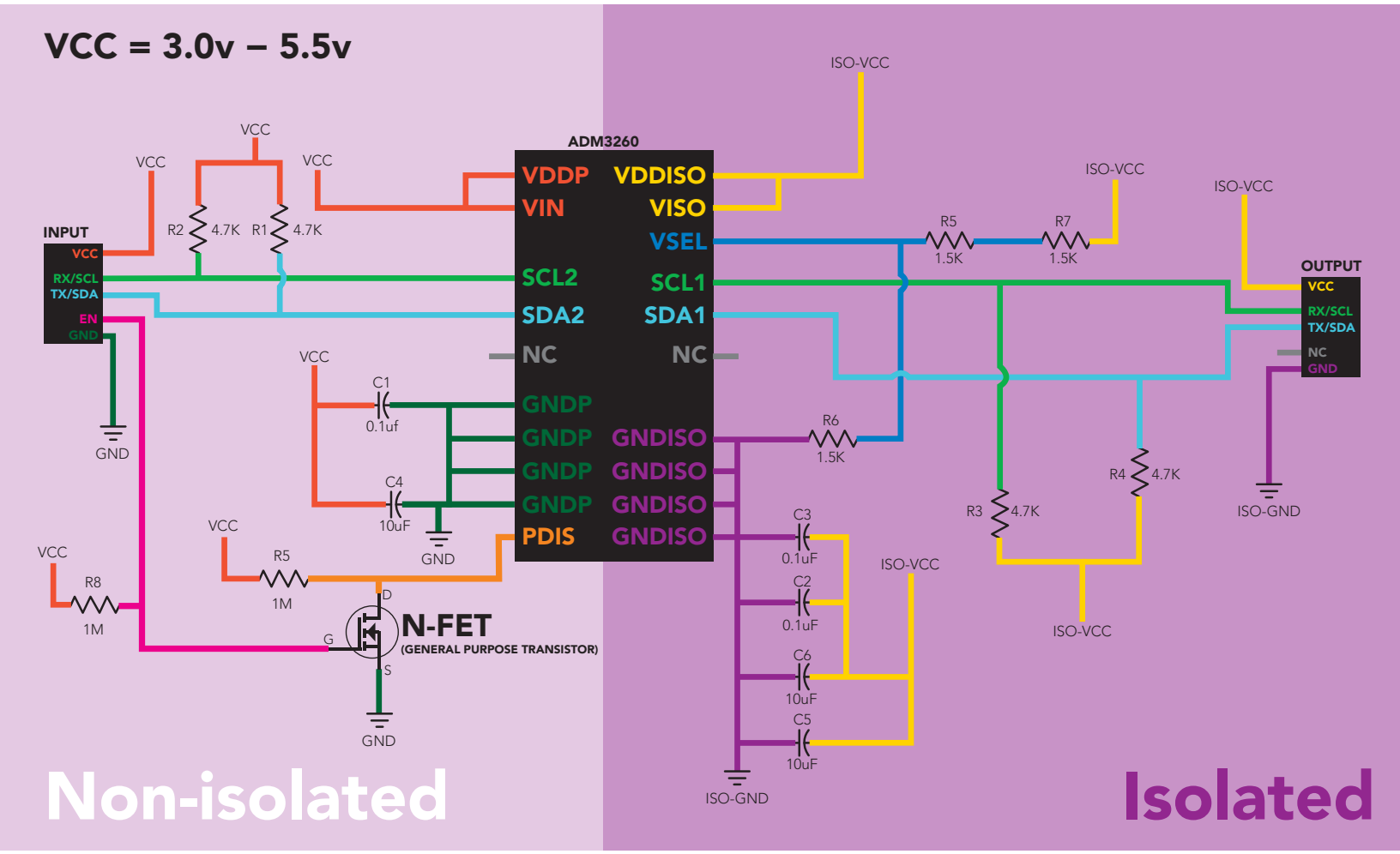

Designing your PCB

The pH OEM™ circuit is a sensitive device. Special care **MUST** be taken to ensure your pH readings are accurate.

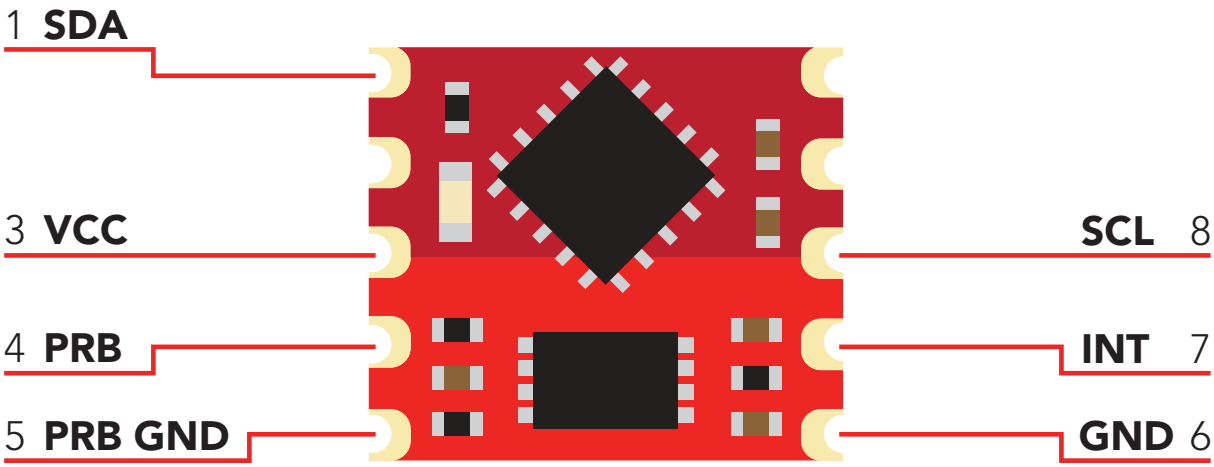

The pH OEM™ circuit requires two separate ground planes to operate properly.
One ground plane is for the digital section of the device, the other is for the analog section.

1 Create two double-sided ground planes, just like the image below.

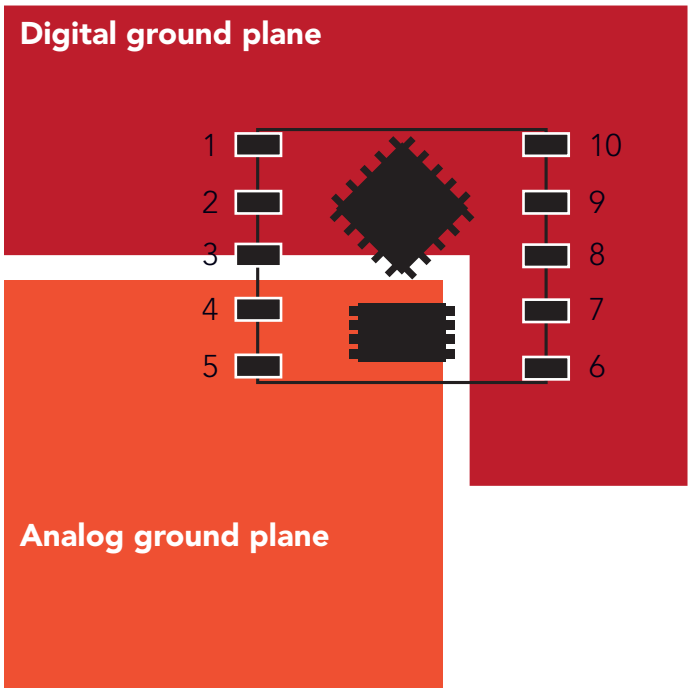

2 Connect pin 5 to the analog ground plane, and pin 6 to the digital ground plane.

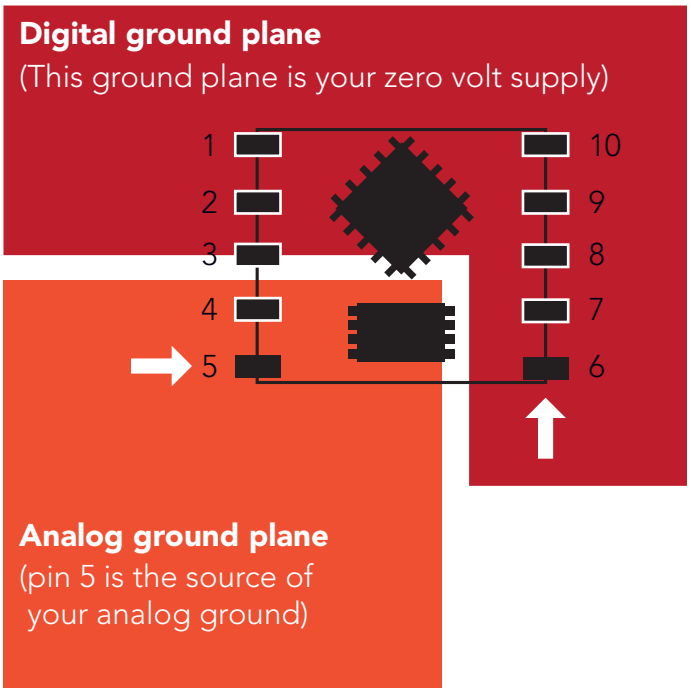

AtlasScientific™ Environmental Robotics

3 Place the probe connector (BNC/SMA) close to the pH OEM™ circuit.

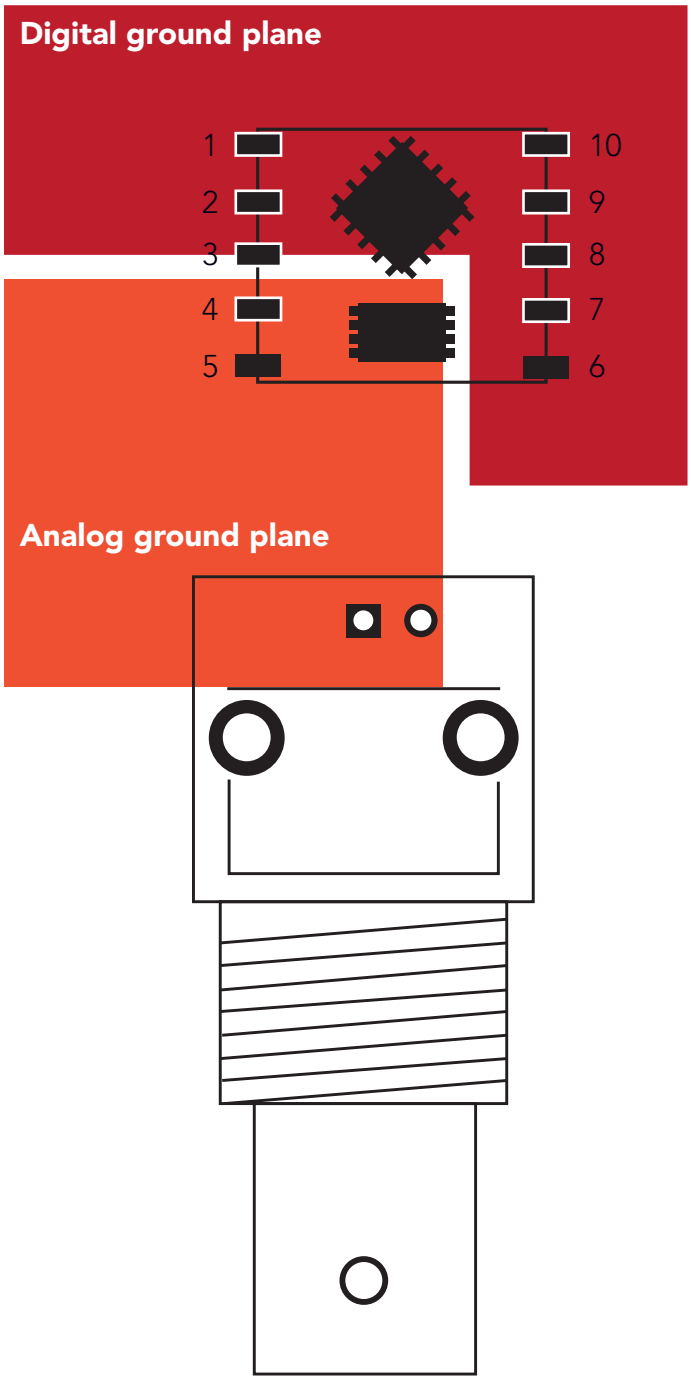

4 Using a 0.4mm trace width connect pin 4 (PRB) to pin 1 on the BNC. Keep this trace as short as possible. This trace is the pH signal path.

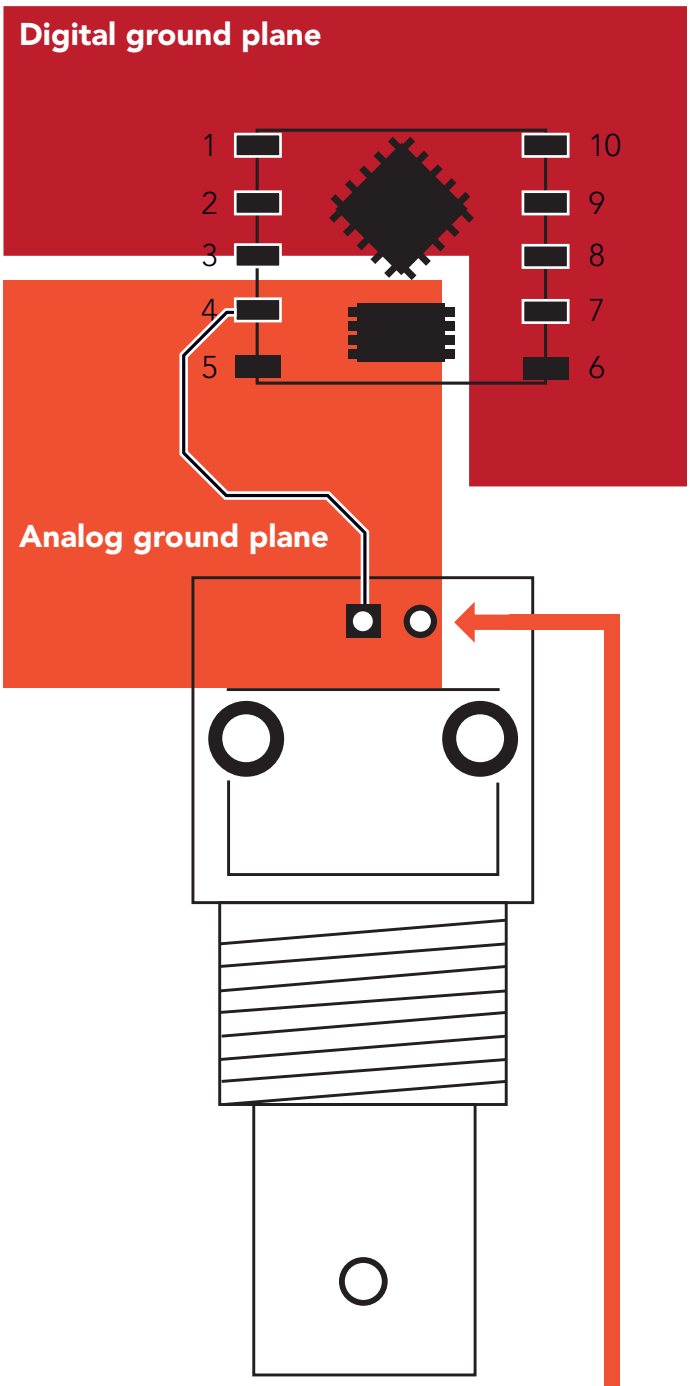

Connect pin 2 on the BNC to the analog ground plane

Cross section of the pH signal path

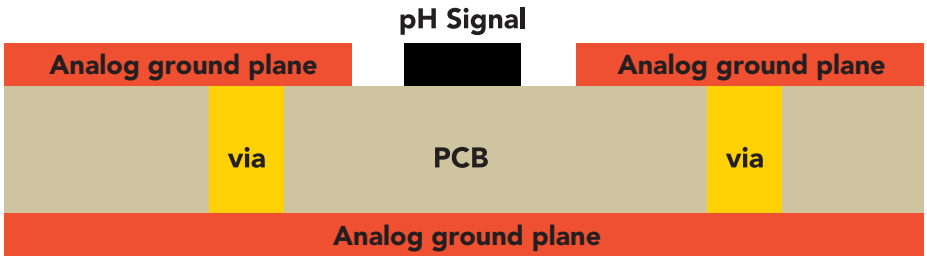

This cross section is an example of how the analog ground plane protects the pH signal. The analog ground should surround the pH signal, on both the top and bottom layers.

5 Rout the other traces as you see fit. If pin 7(INT) is unused leave it floating, *do not connect pin 7 to VCC or ground.*

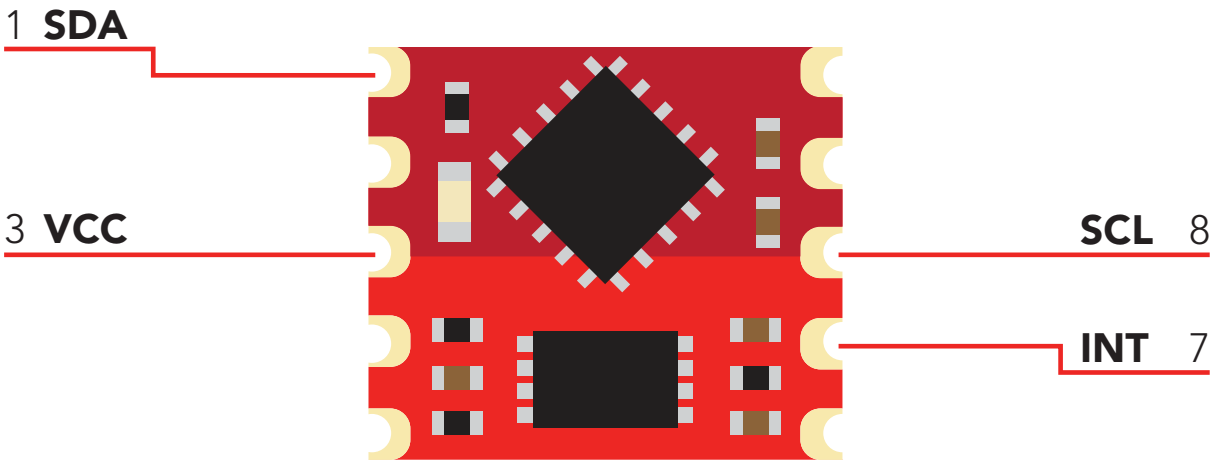

NEVER place vias under the OEM footprint.

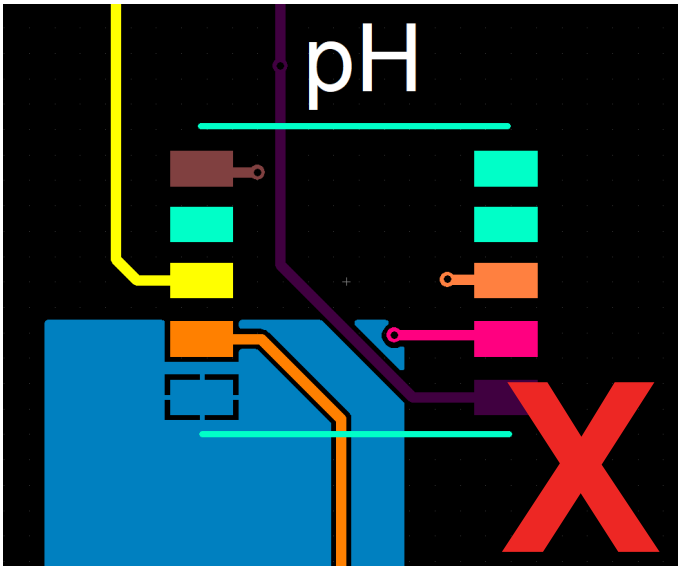

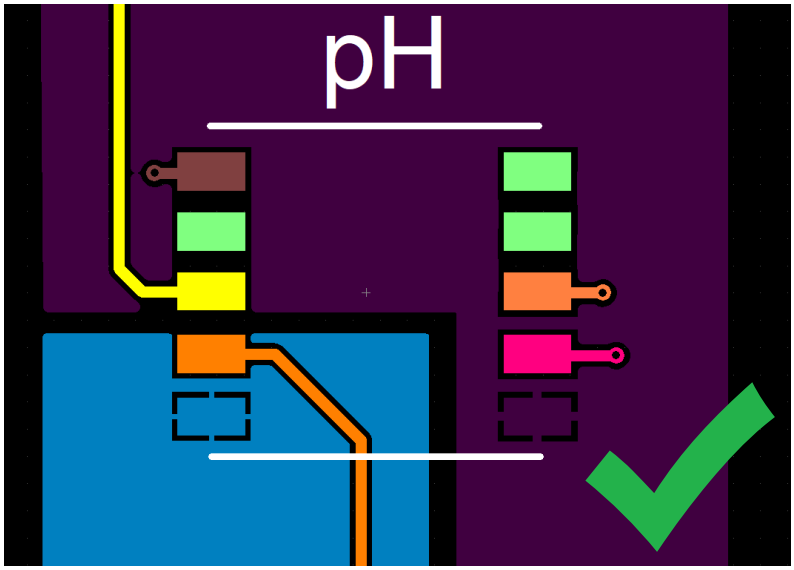

6 Pins marked NC *(No Connect)* must be left floating. ***NEVER*** *connect pins marked NC to VCC or ground.*

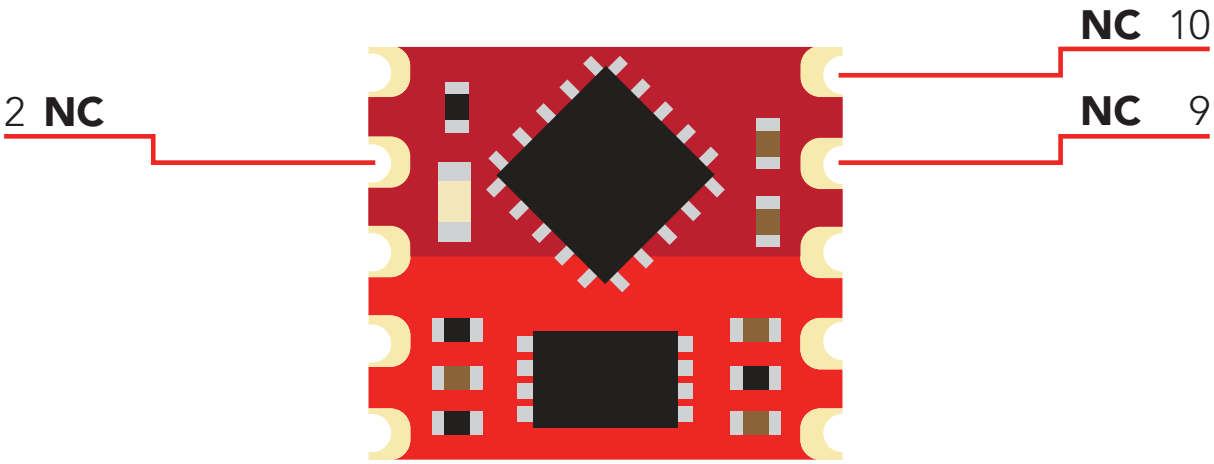

7 If the pH OEM™ circuit is going to be hand soldered, avoid using rosin core solder. Use as little flux as possible. Do not let liquid flux seep under the pH OEM™ circuit. After the pH OEM™ circuit has been soldered to the PCB all flux residue *MUST* be removed. Failure to do so will result in poor quality readings.

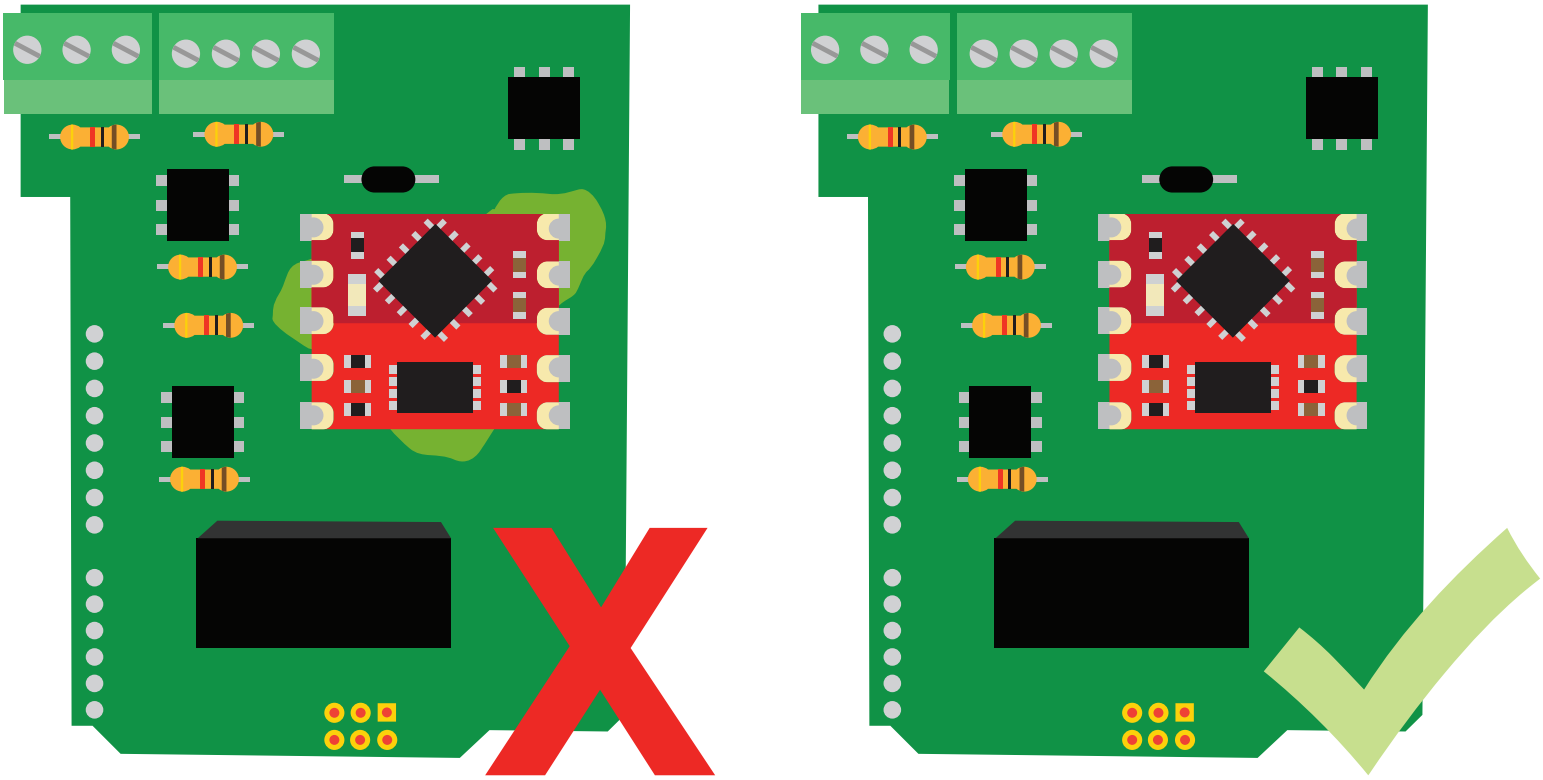

DO NOT SKIP THIS STEP
The PCB must be washed using an ultrasonic PCB cleaner, OR the PCB must be soaked in alcohol for ~20 minutes.

Recommended pad layout

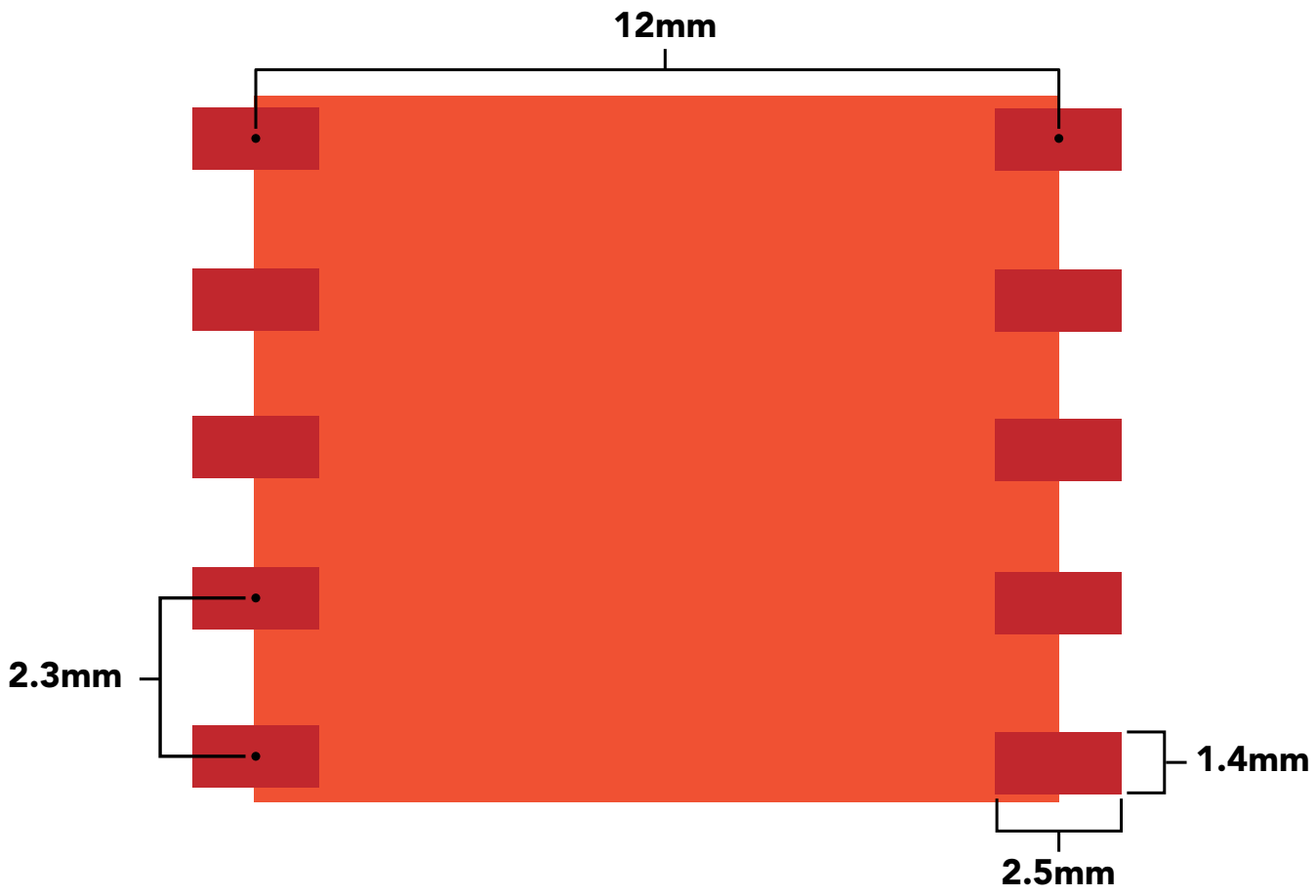

IC tube measurements

Top View

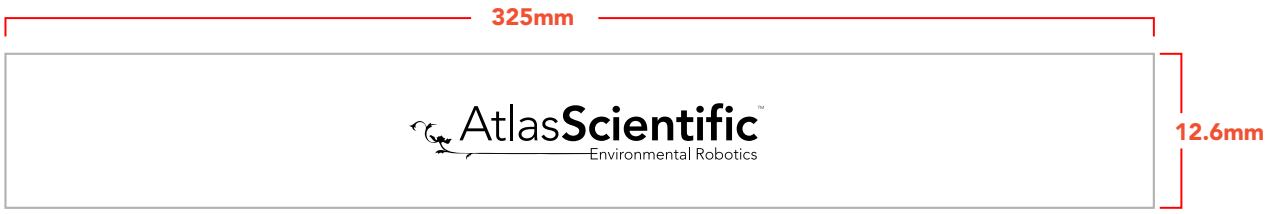

Side View

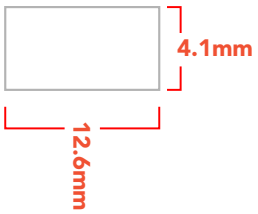

Fits 25 pH OEM™ circuits

	inside dimensions	outside dimensions
L	325mm	325mm
W	11.6mm	12.6mm
H	3.1mm	4.1mm

plastic thickness 0.5mm

Recommended reflow soldering profile

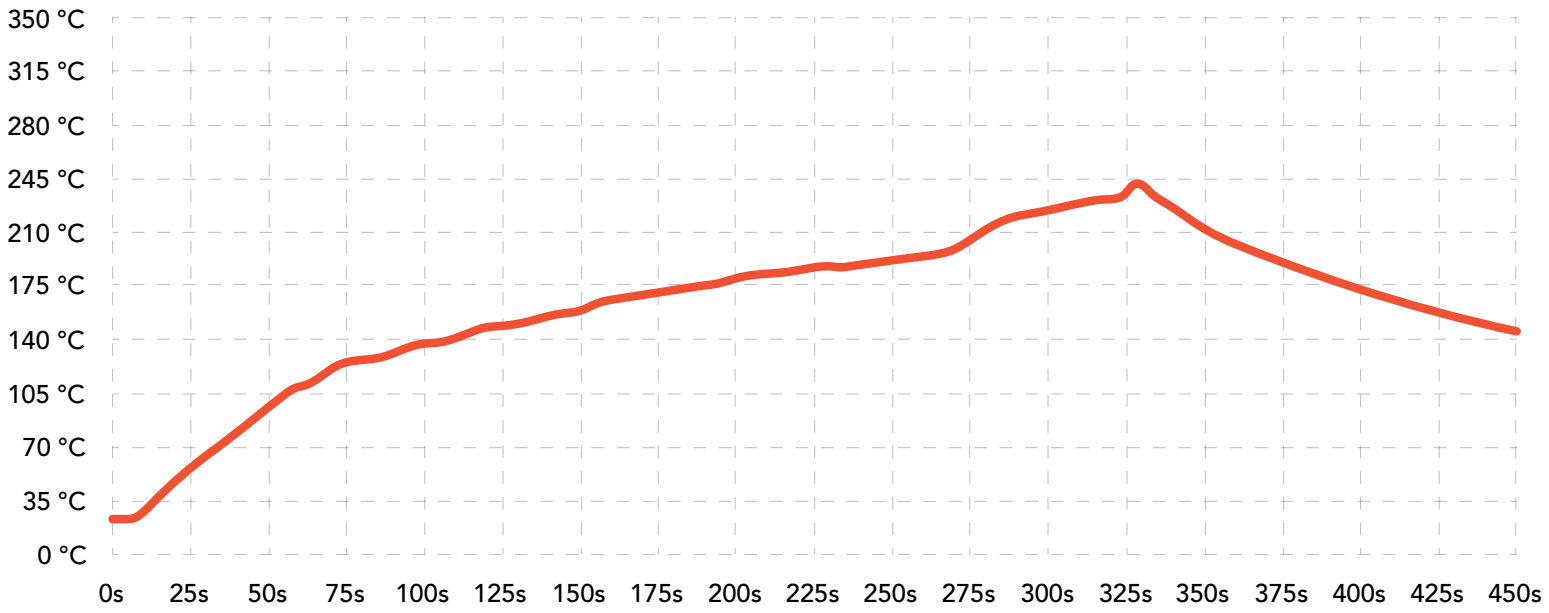

#	Temp	Sec	#	Temp	Sec	#	Temp	Sec	#	Temp	Sec
1	30	15	**11**	163	10	**21**	182	10	**31**	100	25
2	90	20	**12**	165	10	**22**	183	10	**32**	80	30
3	110	8	**13**	167	10	**23**	185	10	**33**	30	30
4	130	5	**14**	170	10	**24**	187	10	**34**	0	15
5	135	5	**15**	172	10	**25**	220	30			
6	140	5	**16**	174	10	**26**	225	20			
7	155	8	**17**	176	10	**27**	230	20			
8	156	10	**18**	178	10	**28**	235	8			
9	158	10	**19**	180	10	**29**	170	20			
10	160	10	**20**	181	10	**30**	130	20			

Pick and place usage

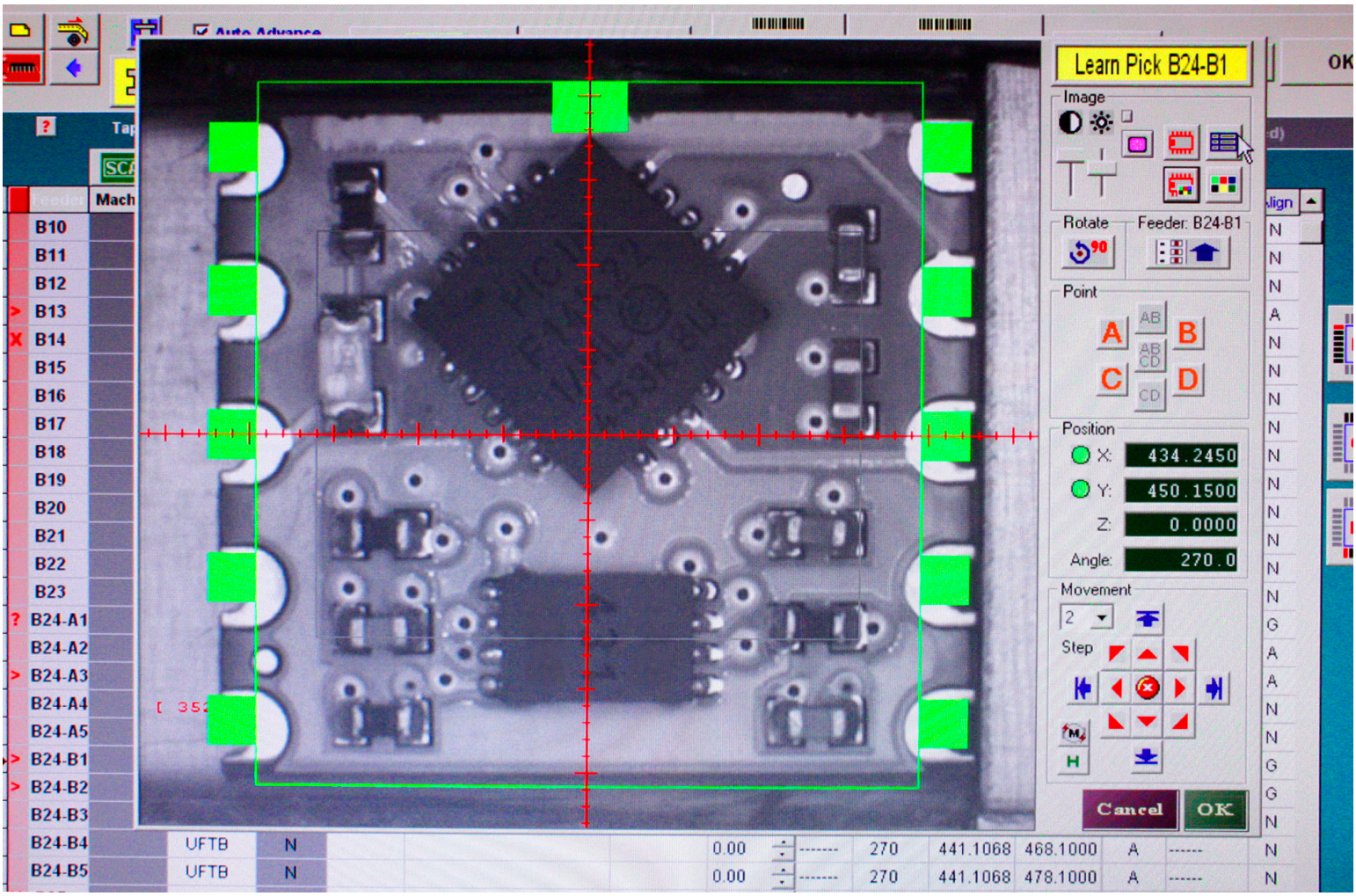

Datasheet change log

Datasheet V 3.7

Revised calibration information on pg. 19

Datasheet V 3.6

Changed calibration confrim register 0x0D from R/W to R.

Datasheet V 3.5

Expanded upon the "Designing your PCB" section of datasheet, pg. 25

Datasheet V 3.4

Revised isolation schematic on pg. 24

Datasheet V 3.3

Changed "Max rate" to "Response time" on cover page.

Datasheet V 3.2

Revised temperature compensation register information.

Datasheet V 3.1

Corrected max rate reading on cover page.

Datasheet V 3.0

Revised entire datasheet

Firmware updates

V4.0 – Initial release (July 7, 2015)

