Atlas**Scientific**™
Environmental Robotics

Male and Female BNC with Terminal Screws Specs

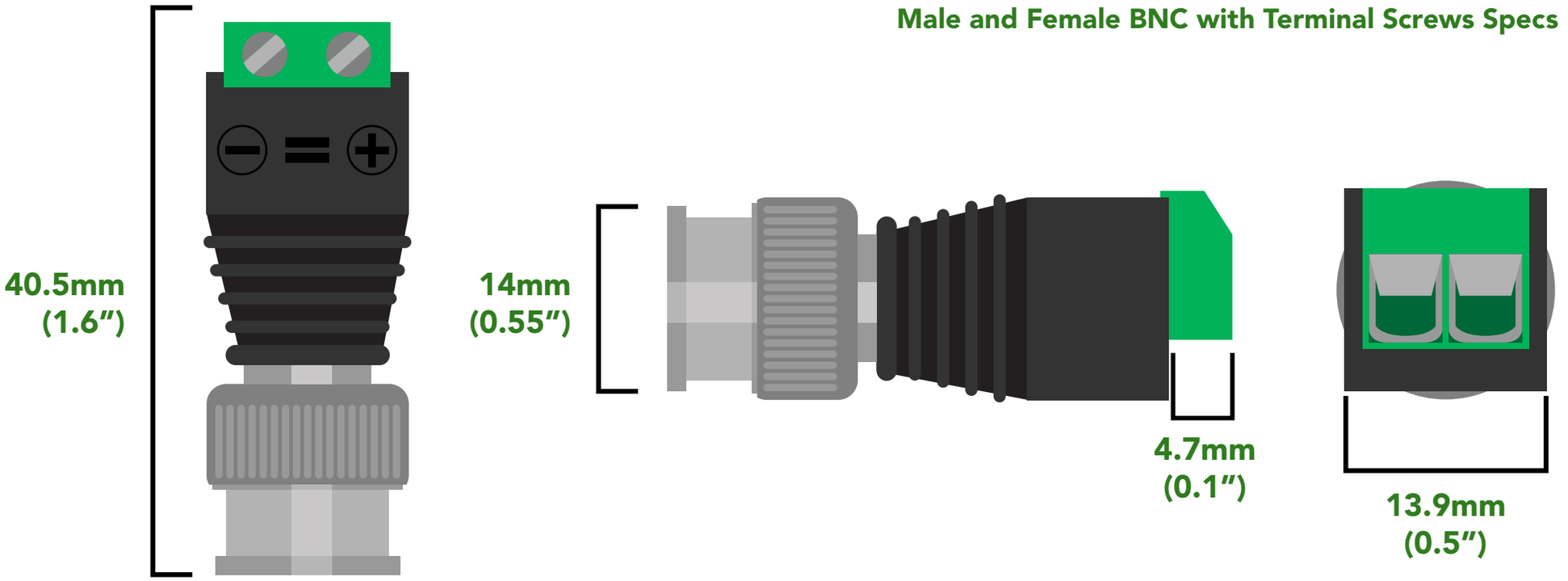

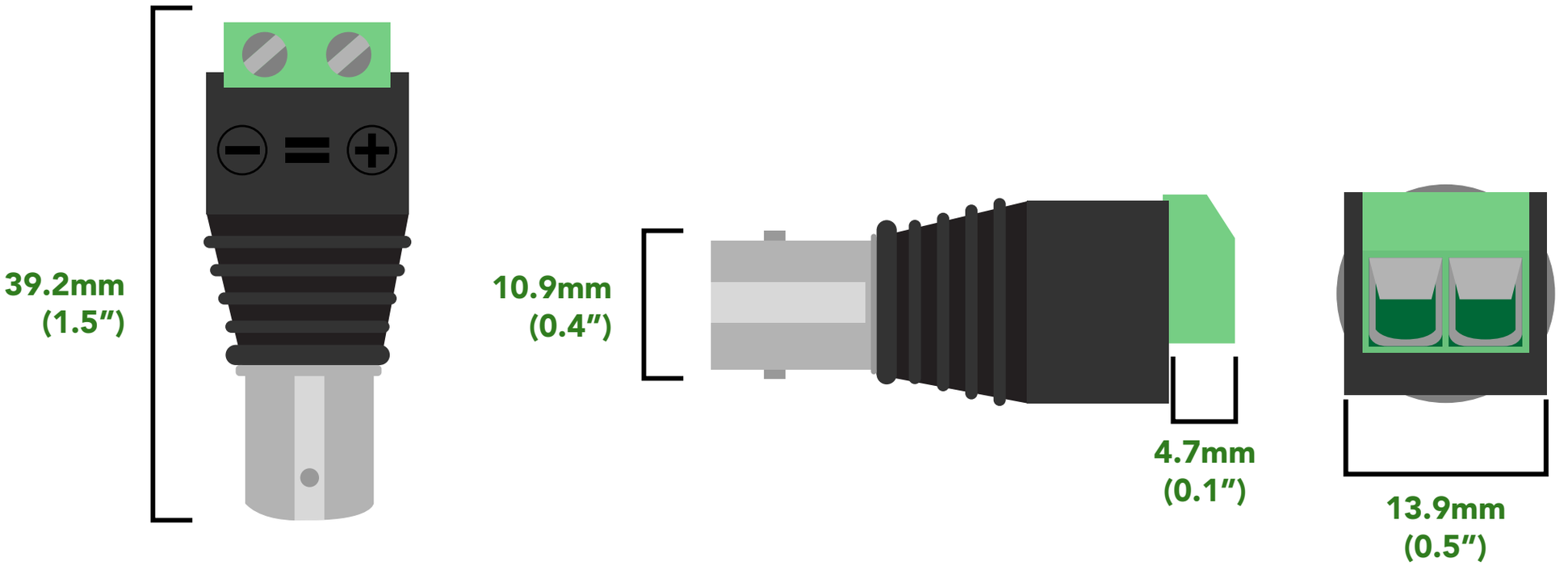

Copyright © Atlas Scientific LLC All Rights Reserved